A1

THE CONTRACTOR SHALL ALLOW FOR DECOMMISSIONING AND REMOVING THE EXISTING EMERGENCY LIGHTING SERVICES INSTALLATION THROUGHOUT THE BUILDING. THE CONTRACTOR SHALL ALLOW FOR DECOMMISSIONING AND REMOVING ALL EXISTING EMERGENCY LIGHT FITTINGS, CABLING, CONTAINMENT, ETC. IN THE AREAS WHERE THE EXISTING EMERGENCY LIGHTING IS TO BE DECOMMISSIONED AND REMOVED. ALLOW FOR ALL NECESSARY WORKS FOR THE DECOMMISSIONING AND REMOVAL OF THE EXISTING EMERGENCY LIGHTING INSTALLATION THROUGHOUT THE BUILDING AND THE SUPPLY AND INSTALLATION OF A NEW EMERGENCY LIGHTING SYSTEM AS HIGHLIGHTED ON THE DRAWINGS AND SPECIFICATIONS IN REPLACEMENT.

NOTE: THE CONTRACTOR SHALL ALLOW FOR THE WIRING AND INSTALLATION OF A NUMBER OF NEW DEVICES FOR THE NEW EMERGENCY LIGHTING SYSTEM THROUGHOUT THE BUILDING WHICH ARE CURRENTLY NOT SHOWN ON THE DRAWING. THE DEVICES SHALL BE INCLUDED IN THE PRICING SCHEDULE. THE ITEMS ARE AS FOLLOWS:

- 10no. WALL MOUNTED EMERGENCY EXIT SIGNS (TYPE 'E1')
- 10no. CEILING HANGING EMERGENCY EXIT SIGNS (TYPE 'E2')
- 10no. IP65 RATED WALL MOUNTED EXTERNAL BULKHEADS (TYPE 'E8')

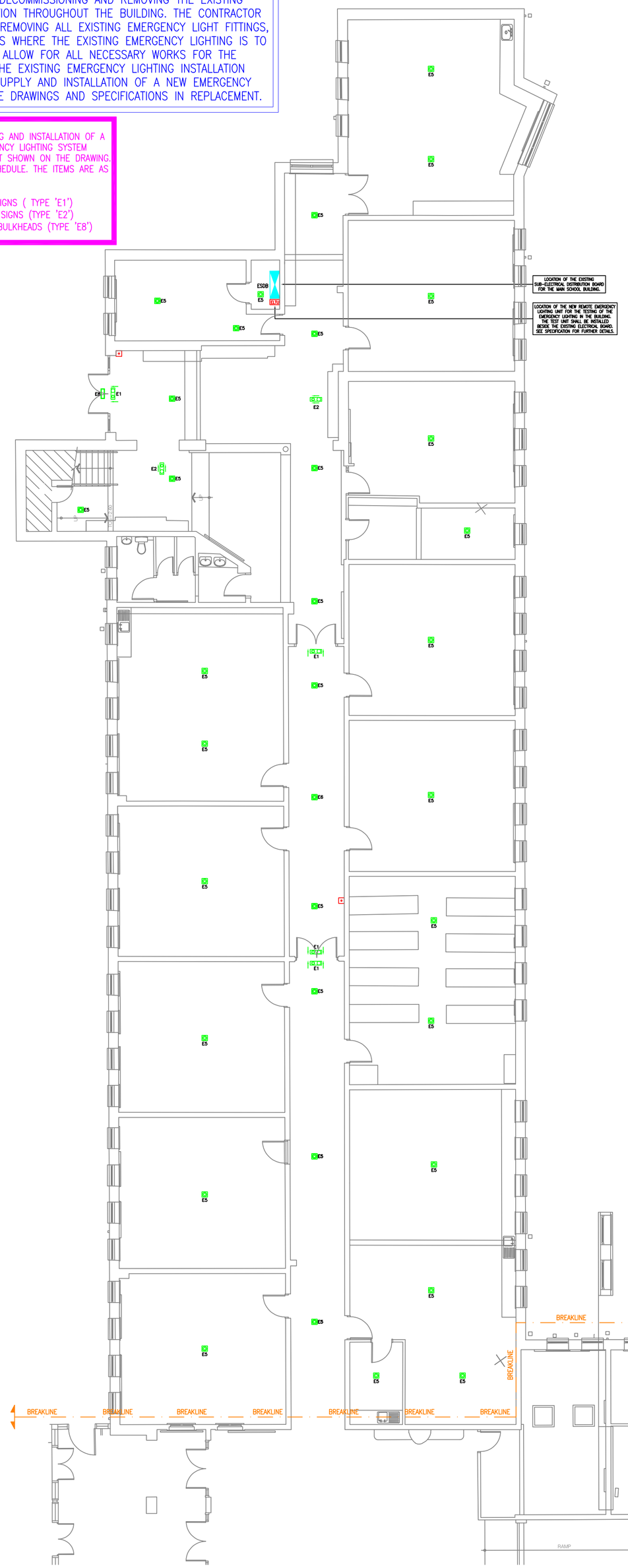

EMERGENCY LIGHTING SERVICES SYMBOLS

EMDB	EXISTING MAIN DISTRIBUTION ELECTRICAL BOARD FOR THE BUILDING. REFER TO THE DRAWING FOR LOCATION OF THE BOARD.
ESDB	EXISTING SUB-DISTRIBUTION ELECTRICAL BOARD FOR THE BUILDING. REFER TO THE DRAWING FOR LOCATIONS OF THE BOARDS.
E1	SINGLE-SIDED EMERGENCY EXIT SIGN (WALL MOUNTED). REFER TO THE DRAWING FOR DIRECTION OF THE EXIT SIGN AND SPECIFICATION FOR FURTHER DETAILS.
E2	DOUBLE-SIDED EMERGENCY EXIT SIGN (HANGING FROM THE CEILING). REFER TO THE DRAWING FOR DIRECTION OF THE EXIT SIGN AND SPECIFICATION FOR FURTHER DETAILS.
E3	SINGLE-SIDED DIRECTIONAL EMERGENCY EXIT SIGN (WALL MOUNTED). REFER TO THE DRAWING FOR DIRECTION OF THE EXIT SIGN AND SPECIFICATION FOR FURTHER DETAILS.
E4	IP65 EMERGENCY EXIT SIGN (WALL MOUNTED). REFER TO THE DRAWING FOR DIRECTION OF THE EXIT SIGN AND SPECIFICATION FOR FURTHER DETAILS.
E5	SURFACE MOUNTED STAND-ALONE LED EMERGENCY LIGHT FITTING WITH 'OPEN AREA VERSION' LENS AND 4watt LAMP. SEE SPECIFICATION FOR FURTHER DETAILS.
E6	SURFACE MOUNTED STAND-ALONE LED EMERGENCY LIGHT FITTING WITH 'OPEN AREA VERSION' LENS AND 4watt LAMP. SEE SPECIFICATION FOR FURTHER DETAILS.
E7	SINGLE-SIDED EMERGENCY EXIT SIGN (HANGING FROM THE CEILING). REFER TO THE DRAWING FOR DIRECTION OF THE EXIT SIGN AND SPECIFICATION FOR FURTHER DETAILS.
E8	IP65 RATED WALL/CEILING MOUNTED LED EMERGENCY BULKHEAD. REFER TO THE SPECIFICATION FOR FURTHER DETAILS.
E9	EMERGENCY TWINSPOTS (WALL MOUNTED). REFER TO THE DRAWING FOR DIRECTION OF THE EXIT SIGN AND SPECIFICATION FOR FURTHER DETAILS.
	NEW GALVANISED STEEL CAGE SHALL BE INSTALLED AROUND SOME FITTINGS. THE GALVINISED STEEL CAGE SHALL BE INSTALLED OVER THE FITTINGS TO PROTECT THE FITTINGS FROM BALL IMPACT. THE GALVANISED STEEL CAGE SHALL BE SUPPLIED AND INSTALLED BY THE CONTRACTOR AS PART OF THE WORKS.

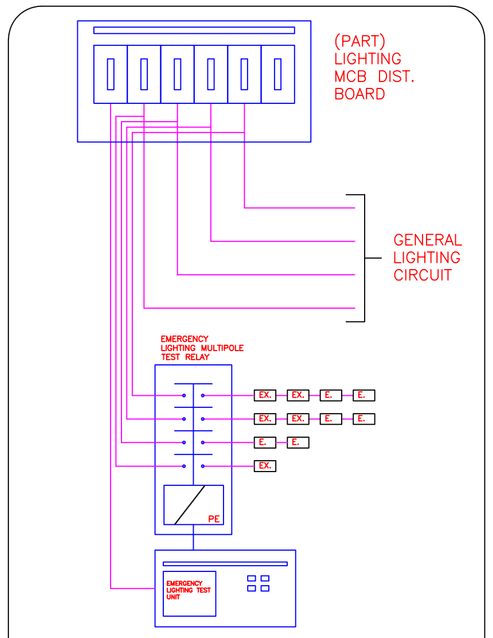

EMERGENCY LIGHTING TEST FACILITY

TYPE 'E1'

SINGLE-SIDED EMERGENCY EXIT SIGN (WALL MOUNTED).

- WALL MOUNTED EMERGENCY EXIT SIGN
- SINGLE SIDED
- REFER TO DRAWING FOR DIRECTION OF THE LEGEND
- FINISHED IN WHITE (RAL 9016)
- BUILT-IN DOWNLIGHTER (70 LUMENS)
- 1watt LED STRIP.
- WEIGHT IS 1.4kg
- CE MARKED
- 6-YEARS WARRANTY ON ALL COMPONENTS INCLUDING THE BATTERY

TYPE 'E2'

DOUBLE-SIDED HANGING EMERGENCY EXIT SIGN (CEILING MOUNTED).

- HANGING EMERGENCY EXIT SIGN FROM CEILING
- DOUBLE-SIDED
- REFER TO DRAWING FOR DIRECTION OF THE LEGEND
- FINISHED IN WHITE (RAL 9016)
- BUILT-IN DOWNLIGHTER (70 LUMENS)
- 1watt LED STRIP.
- WEIGHT IS 1.4kg
- CE MARKED
- 6-YEARS WARRANTY ON ALL COMPONENTS INCLUDING THE BATTERY

TYPE 'E3'

SINGLE-SIDED DIRECTIONAL EMERGENCY EXIT SIGN (WALL MOUNTED).

- WALL MOUNTED EMERGENCY EXIT SIGN
- SINGLE SIDED
- REFER TO DRAWING FOR DIRECTION OF THE LEGEND
- FINISHED IN WHITE (RAL 9016)
- BUILT-IN DOWNLIGHTER (70 LUMENS)
- 1watt LED STRIP.
- WEIGHT IS 1.4kg
- CE MARKED
- 6-YEARS WARRANTY ON ALL COMPONENTS INCLUDING THE BATTERY

TYPE 'E4'

IP65 RATED SINGLE-SIDED EMERGENCY EXIT SIGN (WALL MOUNTED).

- WALL MOUNTED EMERGENCY EXIT SIGN
- SINGLE SIDED
- REFER TO DRAWING FOR DIRECTION OF THE LEGEND
- FINISHED IN WHITE (RAL 9016)
- BUILT-IN DOWNLIGHTER (70 LUMENS)
- 1watt LED.
- IP65 RATED
- CE MARKED
- 6-YEARS WARRANTY ON ALL COMPONENTS INCLUDING THE BATTERY

TYPE 'E5'

SURFACE MOUNTED EMERGENCY LIGHT FITTING WITH OPEN LENS (CEILING MOUNTED).

- SELF-CONTAINED SURFACE MOUNTED EMERGENCY LIGHT FITTING (CEILING MOUNTED)
- OPEN LENS
- FINISHED IN WHITE (RAL 9016)
- 510 LUMENS IN OPERATION.
- 4watt LED LAMP (2no x 2watt LAMPS)
- NON-MAINTAINED
- WEIGHT IS 1kg.
- CE MARKED
- 6-YEARS WARRANTY ON ALL COMPONENTS INCLUDING THE BATTERY

TYPE 'E6'

SURFACE MOUNTED EMERGENCY LIGHT FITTING WITH CORRIDOR LENS (CEILING MOUNTED).

- SELF-CONTAINED SURFACE MOUNTED EMERGENCY LIGHT FITTING (CEILING MOUNTED)
- OPEN LENS
- FINISHED IN WHITE (RAL 9016)
- 510 LUMENS IN OPERATION.
- 4watt LED LAMP (2no x 2watt LAMPS)
- NON-MAINTAINED
- WEIGHT IS 1kg.
- CE MARKED
- 6-YEARS WARRANTY ON ALL COMPONENTS INCLUDING THE BATTERY

TYPE 'E7'

DOUBLE-SIDED HANGING EMERGENCY EXIT SIGN (CEILING MOUNTED).

- HANGING EMERGENCY EXIT SIGN FROM CEILING
- DOUBLE-SIDED
- REFER TO DRAWING FOR DIRECTION OF THE LEGEND
- FINISHED IN WHITE (RAL 9016)
- BUILT-IN DOWNLIGHTER (70 LUMENS)
- 1watt LED STRIP.
- WEIGHT IS 1.4kg
- CE MARKED
- 6-YEARS WARRANTY ON ALL COMPONENTS INCLUDING THE BATTERY

TYPE 'E8'

IP65 RATED LED BULKHEAD (CEILING AND WALL MOUNTED).

- SELF-CONTAINED SURFACE MOUNTED LED EMERGENCY LIGHT FITTING (CEILING MOUNTED)
- IP65 RATED BULKHEAD
- FINISHED IN WHITE (RAL 9016)
- 188 LUMENS IN OPERATION.
- 1watt LED LAMP
- NON-MAINTAINED
- WEIGHT IS 1kg.
- CE MARKED
- 6-YEARS WARRANTY ON ALL COMPONENTS INCLUDING THE BATTERY

GENERAL NOTES:

1. THIS DRAWING IS TO BE READ IN CONJUNCTION WITH THE PARTICULAR SPECIFICATIONS.

2. THE CONTRACTOR SHALL CO-ORDINATE FULLY WITH ALL OTHER TRADES BEFORE COMMENCING WORK. THE CONTRACTOR SHALL BE RESPONSIBLE FOR THE CO-ORDINATION OF ALL SERVICES AND WORKS REQUIRED FOR THE PROJECT. THE CONTRACTOR SHALL CO-ORDINATE FULLY WITH ALL OTHER TRADES BEFORE COMMENCING WORK.

3. EXTRA COSTS INCURRED DUE TO THE CO-ORDINATION EXERCISE NOT BEING COMPLETED WILL NOT BE ACCEPTED BY THE ENGINEER.

4. DO NOT SCALE THIS DRAWING. ALL DIMENSIONS TO BE TAKEN ON SITE. ALL DIMENSIONS IN mm, UNLESS STATED OTHERWISE

5. EXACT LOCATIONS OF ALL SERVICES TO BE AGREED ON SITE. FINAL LOCATIONS OF ALL SERVICES TO BE CO-ORDINATED ON SITE WITH EXISTING LOOSE AND FIXED FURNITURE LAYOUTS IN THE ROOM.

6. THE CONTRACTOR SHALL BE RESPONSIBLE FOR ALL ELECTRICAL WORKS AND BUILDERS WORKS AS IDENTIFIED ON THE DRAWINGS AND IN THE SPECIFICATIONS.

7. THE MAJORITY OF THE EXISTING ELECTRICAL INSTALLATION IN THE BUILDING SHALL BE DECOMMISSIONED AND REMOVED AND REPLACED WITH NEW ELECTRICAL INSTALLATIONS. THE CONTRACTOR SHALL ALLOW FOR DECOMMISSIONING THE FOLLOWING ITEMS IN THE BUILDING AS INDICATED ON THE DRAWINGS:

- THE EXISTING EMERGENCY LIGHTING SERVICES INSTALLATION THROUGHOUT THE BUILDING SHALL BE DECOMMISSIONED AND REMOVED INCLUDING ALL EMERGENCY LIGHT FITTINGS, CABLING, CONTAINMENT, ETC.
- THE EXISTING FIRE ALARM SERVICES INSTALLATION THROUGHOUT THE BUILDING SHALL BE DECOMMISSIONED AND REMOVED INCLUDING ALL SMOKE DETECTORS, HEAT DETECTORS, PANELS, ETC.

8. THE CONTRACTOR SHALL BE RESPONSIBLE TO IDENTIFY SUITABLE FINAL ROUTES FOR ALL CONTAINMENT AND TRAY THROUGHOUT THE BUILDING FOR THE NEW ELECTRICAL SERVICES AND CABLING. NEW MAIN RUNS OF ELECTRICAL TRUNKING/TRAY SHALL BE INSTALLED IN THE AREAS AS INDICATED ON THE DRAWINGS BUT THIS IS INDICATIVE ONLY AND IF THE CONTRACTOR FINDS A MORE CONVENIENT ROUTE FOR ELECTRICAL CONTAINMENT ON SITE THEN THAT WILL BE ACCEPTABLE.

PROTECTIVE SERVICES NOTES:

9. ALL OF THE EXISTING EMERGENCY LIGHTING INSTALLED THROUGHOUT THE BUILDING SHALL BE DECOMMISSIONED AND REMOVED AS PART OF THE WORKS AND A NEW EMERGENCY LIGHTING SYSTEM TO BE SUPPLIED AND INSTALLED THROUGHOUT THE BUILDINGS IN REPLACEMENT, IN THE LOCATIONS AS INDICATED ON THE DRAWING.

10. A NEW EMERGENCY LIGHTING SYSTEM SHALL BE INSTALLED THROUGHOUT THE BUILDING AS INDICATED ON THE DRAWINGS. THE EMERGENCY LIGHTING INSTALLATION SHALL COMPLY WITH I.S. 3217:2023.

11. THE EMERGENCY LIGHTING SYSTEM AND LIGHT FITTINGS SHALL BE CO-ORDINATED WITH SAFETY SIGNS AND FIRST AID WHICH ARE SUBJECT TO STATUTORY REQUIREMENT.

12. THE NEW EMERGENCY LIGHTING INSTALLATION IN THE BUILDING SHALL BE CONNECTED BACK THE NEW ELECTRICAL BOARDS WHERE THE LIGHTING CIRCUITS ARE FED FROM. THIS IS TO ENSURE THAT IN THE EVENT OF THE LIGHTING CIRCUIT TRIPPING IN EACH AREA OF THE BUILDINGS, THE EMERGENCY LIGHTING FOR THESE CIRCUITS WILL ACTIVATE.

13. THE NEW EMERGENCY LIGHTING INSTALLATION TO BE INSTALLED IN THE BUILDING SHALL BE A STAND ALONE EMERGENCY LIGHTING SYSTEM WITH REMOTE LED EMERGENCY LIGHTS.

14. THE ELECTRICAL CONTRACTOR SHALL ALLOW FOR THE SUPPLY AND INSTALLATION OF A NUMBER OF STEEL CAGES TO BE INSTALLED AROUND THE EMERGENCY FITTINGS IN THE SPORTS HALL OF THE BUILDING. REFER TO THE SPECIFICATION FOR FURTHER DETAILS.

TYPE 'E9'

SURFACE MOUNTED EMERGENCY TWINSPOT (WALL MOUNTED).

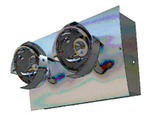

- WALL MOUNTED EMERGENCY TWINSPOT REFER TO DRAWING FOR DIRECTION OF THE LEGEND
- FINISHED IN CHROME
- 2 x 300 LUMENS
- 2 x 3watt LAMPS.
- WEIGHT IS 2.6kg
- CE MARKED
- 8-YEARS WARRANTY ON ALL COMPONENTS INCLUDING THE BATTERY

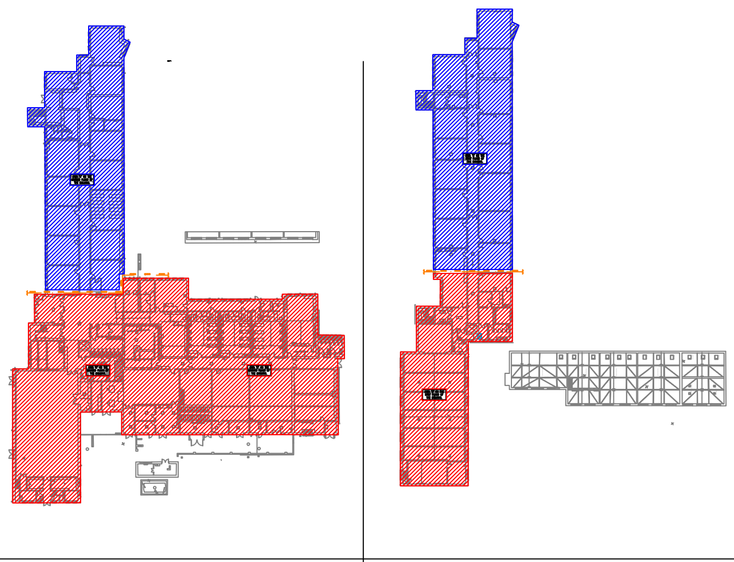

'AREA A' OF THE GROUND & FIRST FLOOR OF THE BUILDING.

'AREA A' OF THE GROUND & FIRST FLOOR OF THE BUILDING.

KEY PLAN FOR THE BUILDING (SCALE 1:500)

REV	DATE	PREPARED BY/PROJECT ENGINEER	QUALITY CHECK BY:
T1	22.07.26	R. WHYTE	M. GORMLEY

M&E CONSULTANT

Galileo ENERGY SERVICES

UNIT A6, M4 BUSINESS PARK,
MAYNOOTH ROAD,
CELBRIDGE,
CO. KILDARE.
Tel: 01-6274103
www.galileoenergy.ie

Copyright©

Drawing Status
TENDER

Job Title
ST. CIARAN'S CS,
TOWNSPARK,
KELLS,
CO. MEATH.

Drawing Title
NEW EMERGENCY LIGHTING INSTALLATION TO BE INSTALLED IN 'AREA A' ON THE GROUND FLOOR OF THE BUILDING.

Architect

Drawing No:
63(E001)

Job No.	Drawn by:	Scale:	Rev.
26-053	R.W	1:125 on A1	T1